DRAWING NUMBER	A	B	C	D	F	G
DCMX01-001	4.595 - 4.795	.377 - .384	.430 - .500	1.278 MAX.	5.908 - 6.048	6.415 MAX.
DCMX01-002	5.878 - 6.078	.377 - .384	.430 - .500	1.663 MAX.	5.908 - 6.048	6.415 MAX.
DCMX01-004	5.878 - 6.078	.502 - .509	.430 - .500	1.663 MAX	6.889 - 7.029	7.396 MAX. (F)

(F)

DRAWING NO.
DCMX01 NO

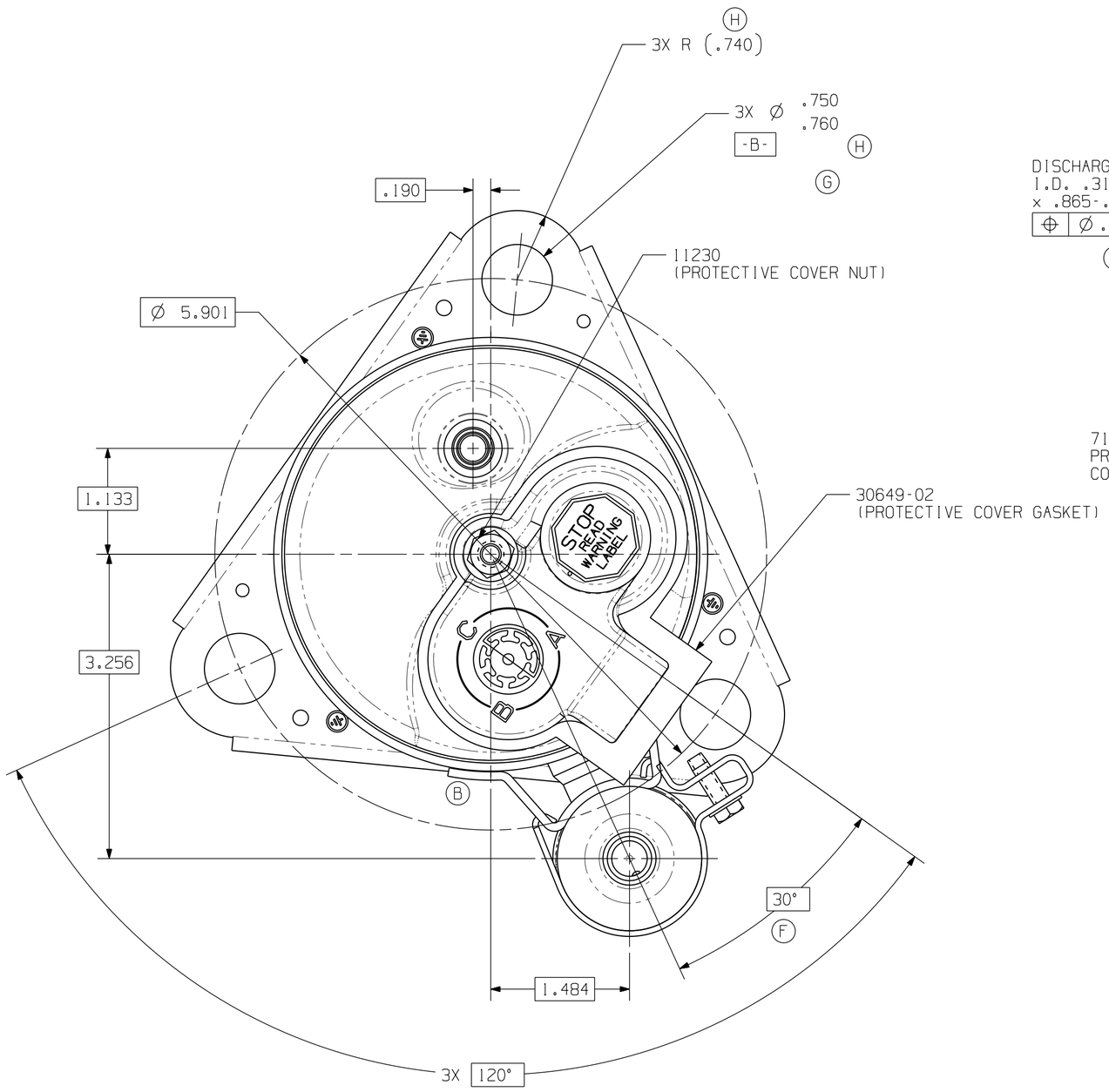

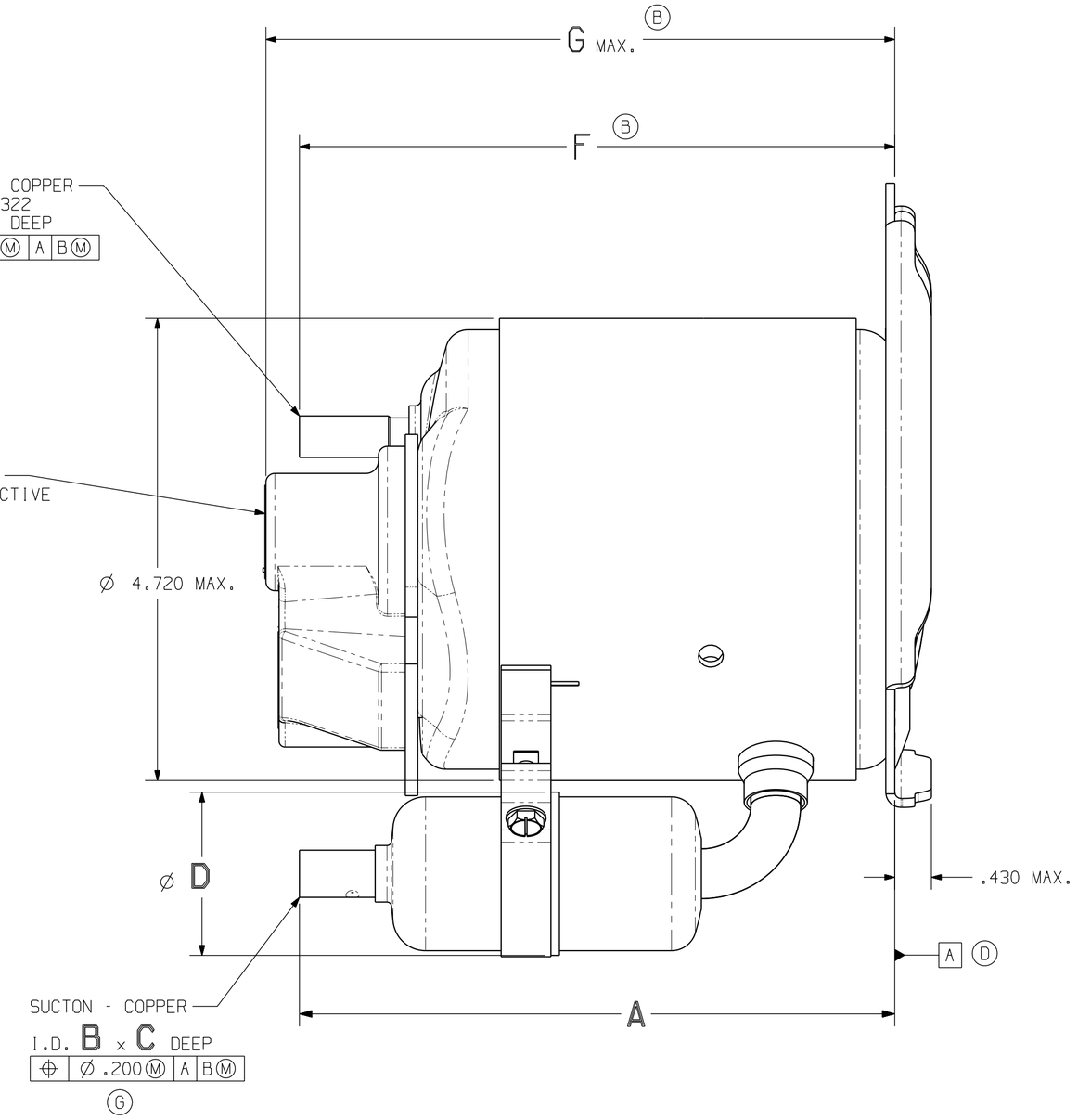

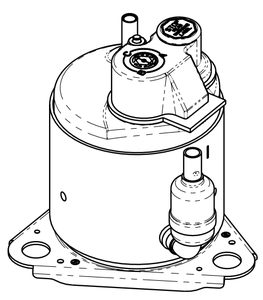

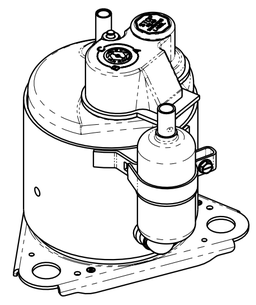

NOTE:

1. PROTECTIVE COVER GASKET, PROTECTIVE COVER, AND PROTECTIVE COVER NUT ASSEMBLED IF CALLED FOR ON BILL OF MATERIAL.

ENGLISH

Q.A. SYMBOLS
★ : CATEGORY I
▲ : CATEGORY II
■ : CATEGORY III
: CATEGORY IV

MASTERFLUX - SIERRA

LT	LC	CHANGE	DATE
H	5E	EC17624 REMOVED POSITION NOTE	SP 090408
	6F	WAS .730/.750	
G	5E	EC17624 WAS .040	SP 040408
	4E	WAS .125	
	4B	WAS .125	
F	6C	#241186-174 OBSOLETED	DREEVES 05MAR04
	6F	DMMX01-003 &	
	5F	REMOVED COLUMN "E" FROM CHART	
E	--	#241186-170 REVISED DWG. TO SHOW NEW ACCUMULATOR GEOMETRY AND BRACKET	DREEVES 24FEB04
D	1C	#241186-145 ADDED DATUM A	DREEVES 21OCT03
C	--	#241186-106 REVISED DWG.	A.S.C. 08APR03
B	2E	#241186-062 REVISED DIMENSIONS AND CHART	REEVES 30JUL02
	2F		
	7D	UPDATED PROTECTIVE COVER	
A	--	#241186-039 REVISED DIM'S.	A.S.C. 02MAY02
REL	--	#241186-032	--

THIS DRAWING OR PRINT (S) IS THE PROPERTY OF MASTERFLUX AND CONTAINS INFORMATION PROPRIETARY TO MASTERFLUX. RECIPIENT ACCEPTS THIS DRAWING OR PRINT (S) AS MADE AVAILABLE TO THE RECIPIENT UNDER THE FOLLOWING SPECIFIC CONDITION THAT NEITHER IT NOR THE INFORMATION CONTAINED THEREON OR OTHERWISE DISCLOSED SHALL BE DISCLOSED OR MADE AVAILABLE TO OTHERS WITHOUT THE PRIOR WRITTEN CONSENT OF MASTERFLUX AND THAT SUCH INFORMATION AND/OR EXPRESSED IDEAS SHALL NOT BE COPIED OR DUPLICATED IN ANY MANNER OR TO ANY EXTENT WITHOUT APPROVED IN WRITING BY MASTERFLUX. SPECIFIC WRITTEN CONSENT AND/OR LICENSE TO USE THE DRAWING OR PRINT (S) OR ANY PART THEREOF TO MASTERFLUX AT THE LATTER'S REQUEST PROMPTLY AFTER RECEIPT OF SUCH REQUEST.

DIS.CODE

NAME: SALES COMPRESSOR

DWN.	CK.	APR.	SCALE
ASC 23APR02	ON FILE	ON FILE	1:1 & NOTED

THIS PRINT SUPERSEDES ALL PRINTS PRIOR TO

MASTERFLUX

MATERIAL: NOTED

DRAWING NO. DCMX01 NO

DO NOT SCALE THIS DRAWING. ALL FERROUS MATERIALS MUST NOT BE MAGNETIZED AS REQUIRED FOR ASSEMBLY OF COMPRESSOR ASSEMBLY.

BANNER