DRAWING NUMBER	A	B	C	D	F	G	H
DCMX02-001	6.175-6.375	.502-.509	.430 - .500	1.663 MAX.	6.961-7.149	7.513 MAX.	30
DCMX02-002	6.175-6.375	.502-.509	.430 - .500	1.663 MAX.	6.961-7.149	7.513 MAX.	-27

DRAWING NO.
DCMX02 NO

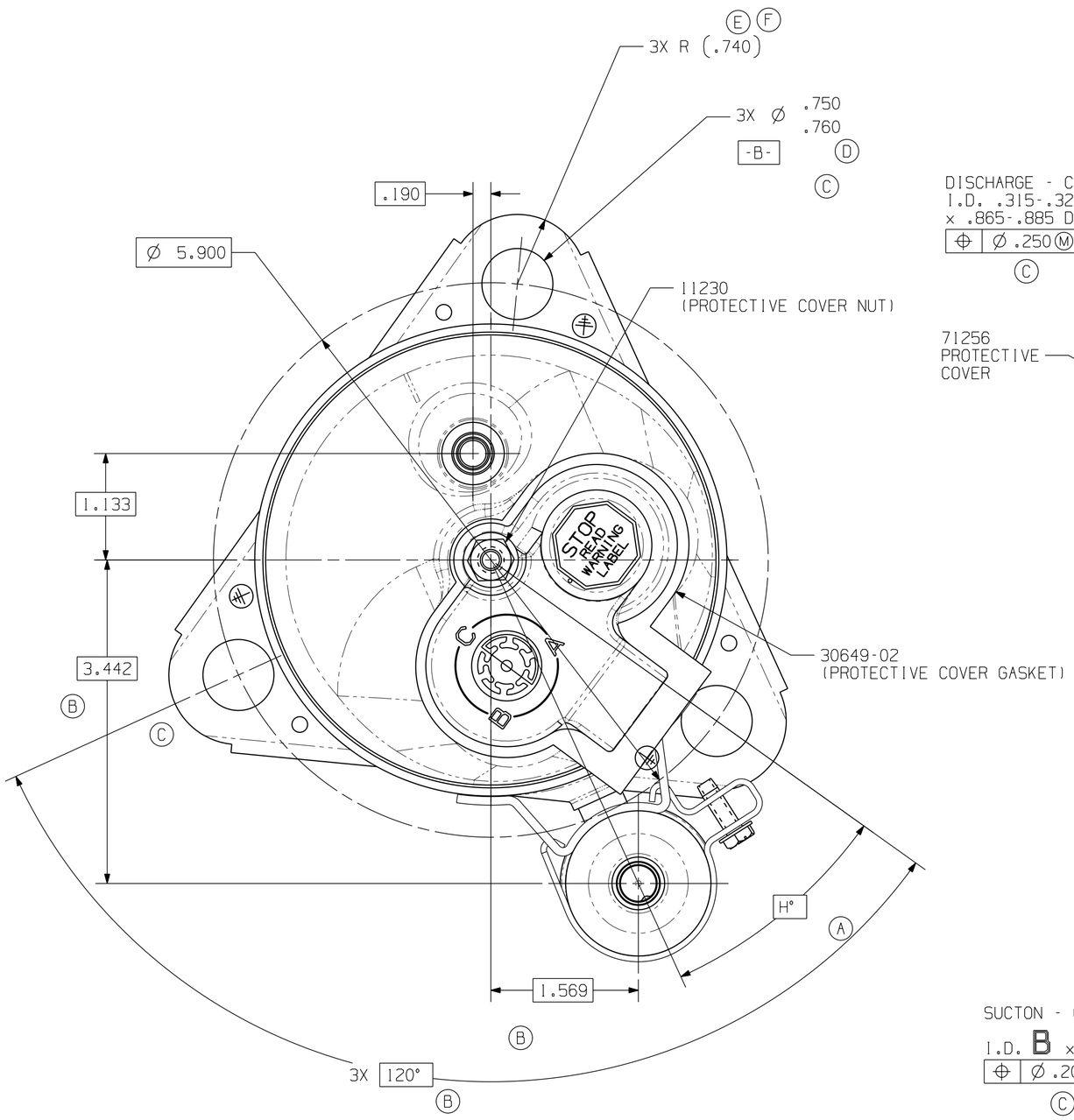

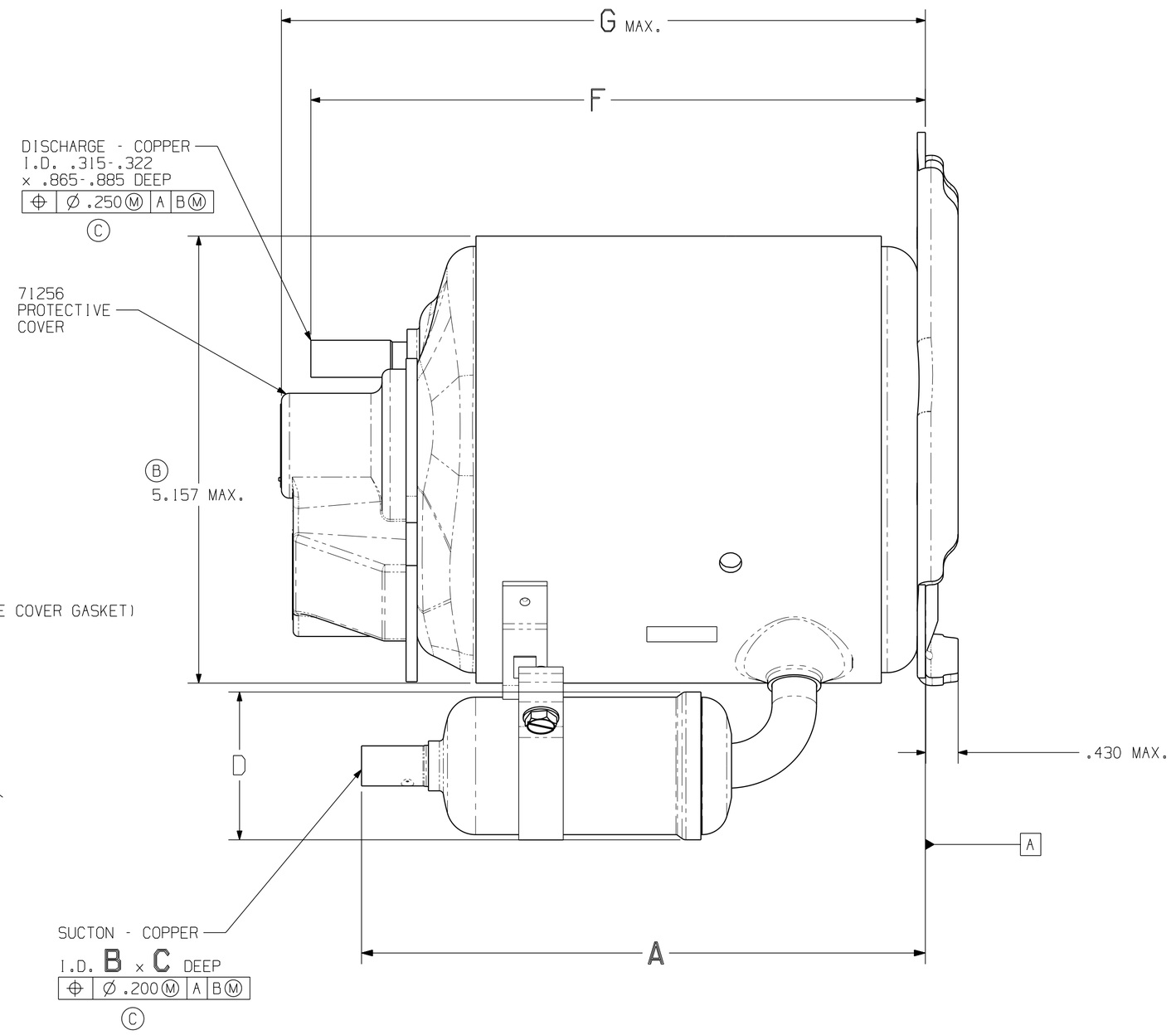

ENGLISH

Q.A. SYMBOLS
★ = CATEGORY I
▲ = CATEGORY II
■ = CATEGORY III
= CATEGORY IV

MASTERFLUX - SIERRA

LT	LC	CHANGE	DATE
F	6F	ECI7624 NOW REF'D DIM.	SP 11APR08
E	6F	ECI7624 WAS .230/.250	SP 10APR08
D	5E	ECI7624 REMOVED POSITION NOTE	SP 08APR08
C	5E	ECI7624 WAS Ø .040	SP 04APR08
	5E	WAS Ø .125	
	5B	WAS Ø .125	
	8C	REMOVED CONNECTOR	
B	-	NEW ACCUMULATOR	EAR 29MA107
	6F	WAS 2.434 MAX	
	8F	WAS 6.672-6.872	
	7F	WAS .377-.384	
	8C	WAS 3.567	
	6B	WAS 1.56	
	7D	ADD M16 HOLE DIM.	
A	7D	#243843-029 A WAS 6.502-6.702 F WAS 6.797-6.979 G WAS 7.343 MAX ADDED COLUMN F ADDED DCMX02-002	EAR 28JUL06
REL	--	#243843-009	--

THIS DRAWING OR PRINT (S) IS THE PROPERTY OF MASTERFLUX AND CONTAINS INFORMATION RECOGNIZED MASTERFLUX. (II) IS MADE AVAILABLE TO THE RECEIVED ONLY FOR REFERENCE AND SPECIFIC CONDITION THAT NEITHER IT NOR THE INFORMATION CONTAINED SHALL BE DISCLOSED OR MADE AVAILABLE TO THIRD PARTIES WITHOUT THE PRIOR WRITTEN CONSENT OF MASTERFLUX. (III) THAT SUCH INFORMATION TO ANY PERSON OR ENTITY NOT APPROVED IN WRITING BY MASTERFLUX. (IV) THAT THIS DRAWING OR PRINT (S) NOT BE COPIED OR DUPLICATED IN ANY MANNER OR TO ANY EXTENT WITHOUT SPECIFIC WRITTEN CONSENT AND (V) THAT ALL ORIGINALS AND COPIES THEREOF TO MASTERFLUX AT THE LATTER'S REQUEST PROMPTLY AFTER EXPIRATION OF THE ABOVE

DIS.CODE

NAME: SALES COMPRESSOR

DO NOT SCALE THIS DRAWING. FERROUS MATERIALS MUST NOT BE MAGNETIZED AS REQUIRED FOR ASSEMBLY OF COMPRESSOR ASSEMBLY.

DWN.	CK.	APR.	SCALE
EAR 02MAR06	ON FILE	ON FILE	1:1 & NOTED

THIS PRINT SUPERSEDES ALL PRINTS PRIOR TO

MASTERFLUX

MATERIAL: NOTED

DRAWING NO. DCMX02 NO

BANNER