DRAWING NO.
DGMX012

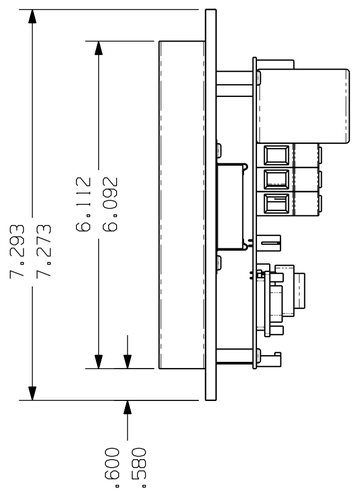

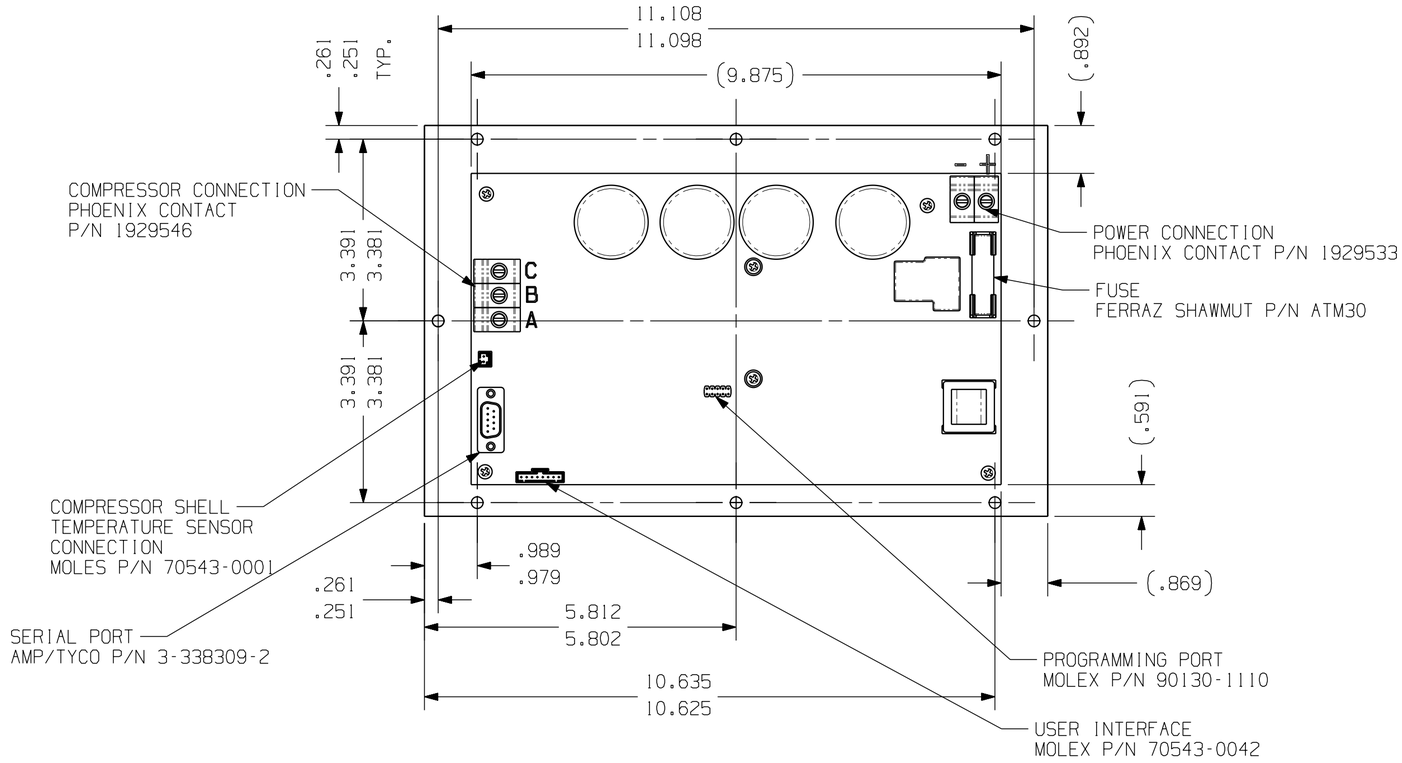

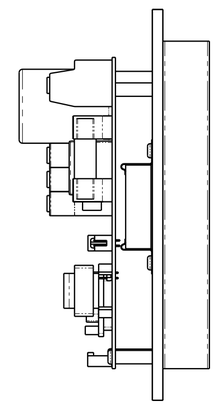

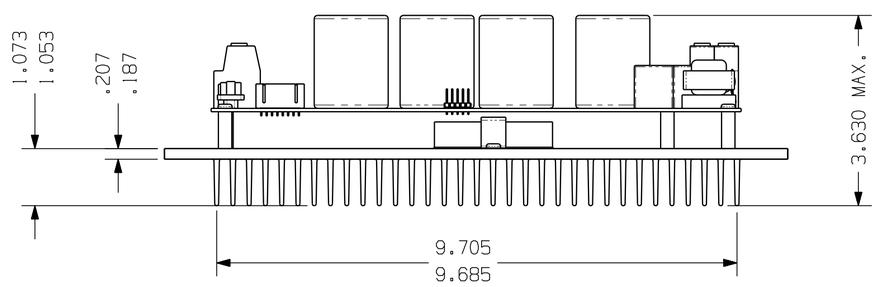

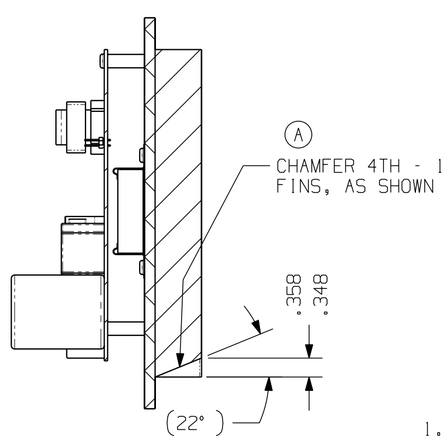

SECTION A-A

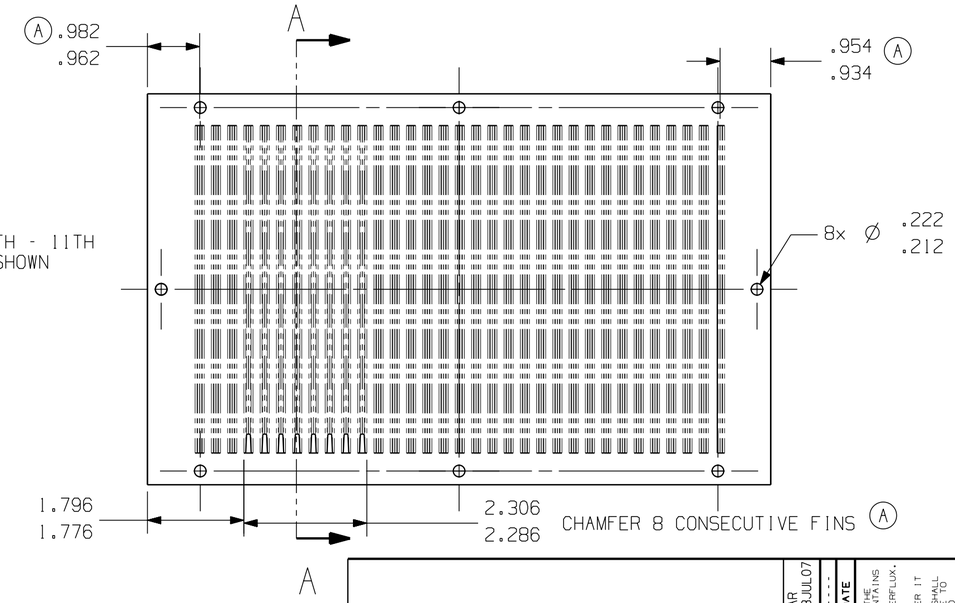

ENGLISH

Q.A. SYMBOLS
★ : CATEGORY I
▲ : CATEGORY II
■ : CATEGORY III
: CATEGORY IV

MASTERFLUX

REV	LT	LC	CHANGE	DATE
A	--	ECI1495	UPDATE HEATSINK	EAR 18JUL07
		EC7222		----

THIS DRAWING OR PRINT IS THE PROPERTY OF MASTERFLUX AND CONTAINS INFORMATION AND CONTENT THAT IS MASTERFLUX. IT IS MADE AVAILABLE TO AND ACCEPTED BY THE RECIPIENT FOR SPECIFIC CONDITION THAT NEITHER IT NORMAL INFORMATION CONTAINED SHALL BE DISCLOSED OR MADE AVAILABLE TO OTHERS WITHOUT THE PRIOR AND SPECIFIC WRITTEN CONSENT OF MASTERFLUX. RECEIVER AND THAT SUCH INFORMATION AND CONTENT SHALL NOT BE USED FOR ANY OTHER PURPOSE THAN APPROVED IN WRITING BY MASTERFLUX. AND NOT TO BE REPRODUCED IN ANY MANNER OR TO ANY EXTENT WITHOUT THE PRIOR AND SPECIFIC WRITTEN CONSENT AND IN ACCORDANCE WITH THE AGREEMENT THEREOF TO MASTERFLUX AT THE TIME OF RECEIPT. MATTERS REQUIRED TO BE RETURNED PROMPTLY AFTER WORK IS COMPLETED.

DIS.CODE

DO NOT SCALE THIS DRAWING. ALL HAZARDOUS MATERIALS MUST NOT BE MAGNETIZED AS REFERENCED AT A COMPRESSOR ASSEMBLY.

NAME: SALES CONTROLLER

DWN.	CK.	APR.	SCALE	THIS PRINT SUPERSEDES ALL PRINTS PRIOR TO
ASC 25SEP06	ON FILE	ON FILE	1:1 & NOTED	

MASTERFLUX

MATERIAL: PER BOM

DRAWING NO. DGMX012

BANNER
User: erobbins Part/Rev: mx-dgmx012_a-c.prt Date: 18-Jul-07 Time: 15:41